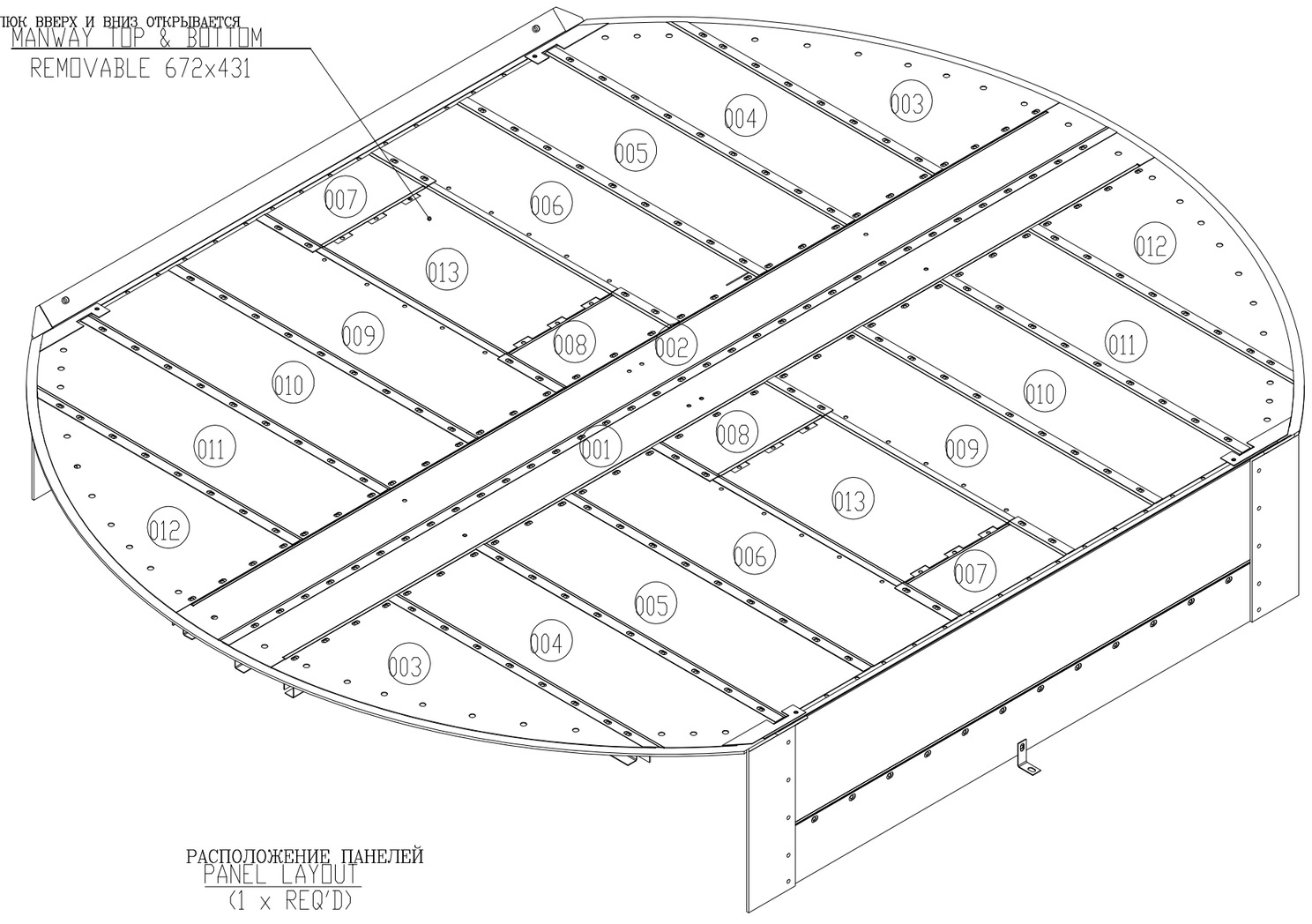

РАСПОЛОЖЕНИЕ ПАНЕЛЕЙ
PANEL LAYOUT
(1 x REQ'D)

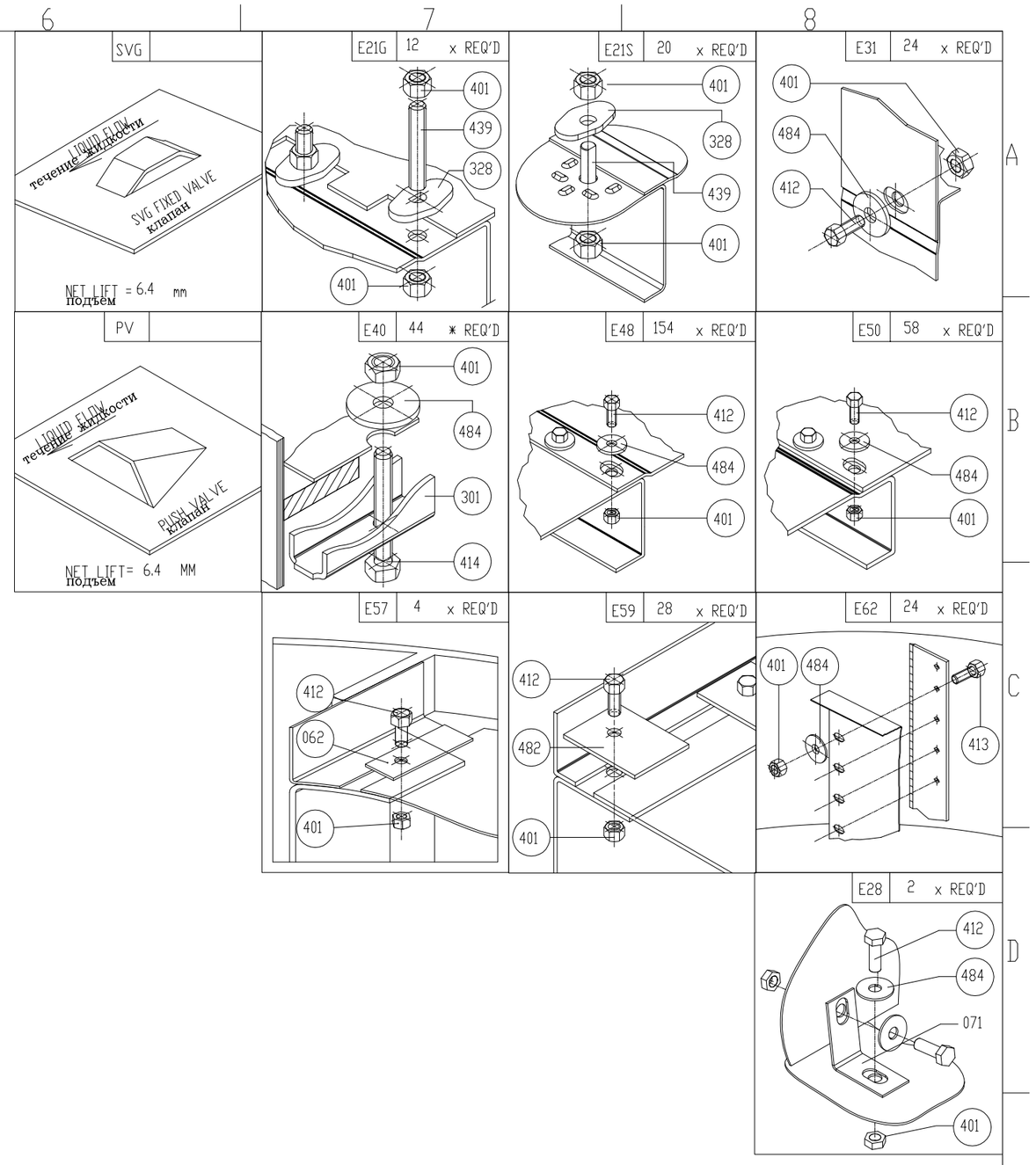

	описание изменений	выполнил	дата	проверил	дата	утвердил	дата
01	Design revision.	RASALSH	02.06.2011	PURANIKMA	03.06.2011	HANDESH	03.06.2011
00	Original issue.	RASALSH	24.01.2011	GORECH	24.01.2011	PURANIKMA	25.01.2011
rev	revison remarks	issued by	date	checked	date	approved	date

SAP#300012115 C
Sec-ID: 3600
Col-No./Tag: 001/K-300 VAC
Bed: TRAYS 4-6 AD

Project: 2139334.06 ACNEFT
Customer: SALAVATNEFTEORGSINTHEZ
Customer-P.O.:2139334.06
customer-dwg.:
End user:
Plant/Area:

Size: A2 scale 1:15

SULZER

2 Pass SVG odd tray 5
НЕЧЕТНАЯ 2-ПОТОЧНАЯ SVG ТАРЕЛКА #5

drawing-no.: 2139334-001-094-3/3

Drawing-state: стадия
CERTIFIED FINAL

This document is entrusted to the recipient personally. The copyright remains with SULZER CHEMTECH. Recipients must obtain written authority of the said company before wholly or partly use or duplicating the contents or disclosing same to others. All rights reserved.

1000119180-DRW-AD